MUZZI

PRECISION MECHANICS

ELECTROPLATED DIAMOND AND CBN TOOLS FOR THE MECHANICAL INDUSTRY

MUZZI

PRECISION MECHANICS

ELECTROPLATED DIAMOND AND CBN TOOLS FOR THE MECHANICAL INDUSTRY

INDEX

page

DIAMOND WHEELS FOR BRAKE PADS
8 Roughing drum wheels
8 Finishing cup wheels
9 Chamfering wheels with angle
9 Chamfering wheels with radius
9 Slotting wheels

DIAMOND WHEELS FOR CARBIDE ROLLS
11 Radius wheels for profile grinding

13 **CBN WHEELS FOR COMPRESSION SPRINGS**

CBN WHEELS FOR BAND SAW BLADES
15 “Hook” shape wheels

STANDARD TOOLS
17 Internal grinding pins
18 Internal grinding wheels
18 Internal grinding wheels with recess
19 Spherical grinding pins
19 Cup wheels

MUZZI has been producing electroplated tools for the mechanical industry since its foundation in 1980.

Thanks to continuous R&D investments, the company has widened the application of electroplated tools, nowadays used in many different fields.

During the last forty years the firm has been steadily growing, moving from a small shop to a 1500 square metre plant and employing more than twenty people.

Today MUZZI is a well established company with customers in Europe and in many other countries all around the world.

Our tools are made in Italy and most of the production activities are performed in our plant in San Leo.

MUZZI is a leading producer of electroplated diamond and CBN tools and it is also the technological partner of many important industries.

We support machine producers and grinding shops to develop tailored solutions, to optimise processes and to reduce costs.

We consider ourselves as a competent technological partner.

We can assist our customers in defining the best grinding strategy and the optimal grinding parameters.

Our diamond and CBN tools respond to tight dimensional specifications and to the highest quality standards.

The dimensional precision, the abrasive layer quality and the balancing of our diamond and CBN tools are secured by high-end instruments and procedures.

MUZZI is ISO9001 certified for the design, production and refurbishment of electroplated diamond and CBN tools.

Since the beginning the company has embraced the philosophy of the Quality System, focusing on the customer satisfaction through the quality of our product and service.

We can design the tool according to your specifications and needs.

To achieve the best results, we take advantage of a 3D modelling software which includes stress analysis capabilities.

Our tools are produced with synthetic diamond, natural diamond and numerous CBN grades.
All our grits are perfectly sieved, with crystals ranging from D20 up to D1181.

We support our customers in choosing the best abrasive and grit for the application.

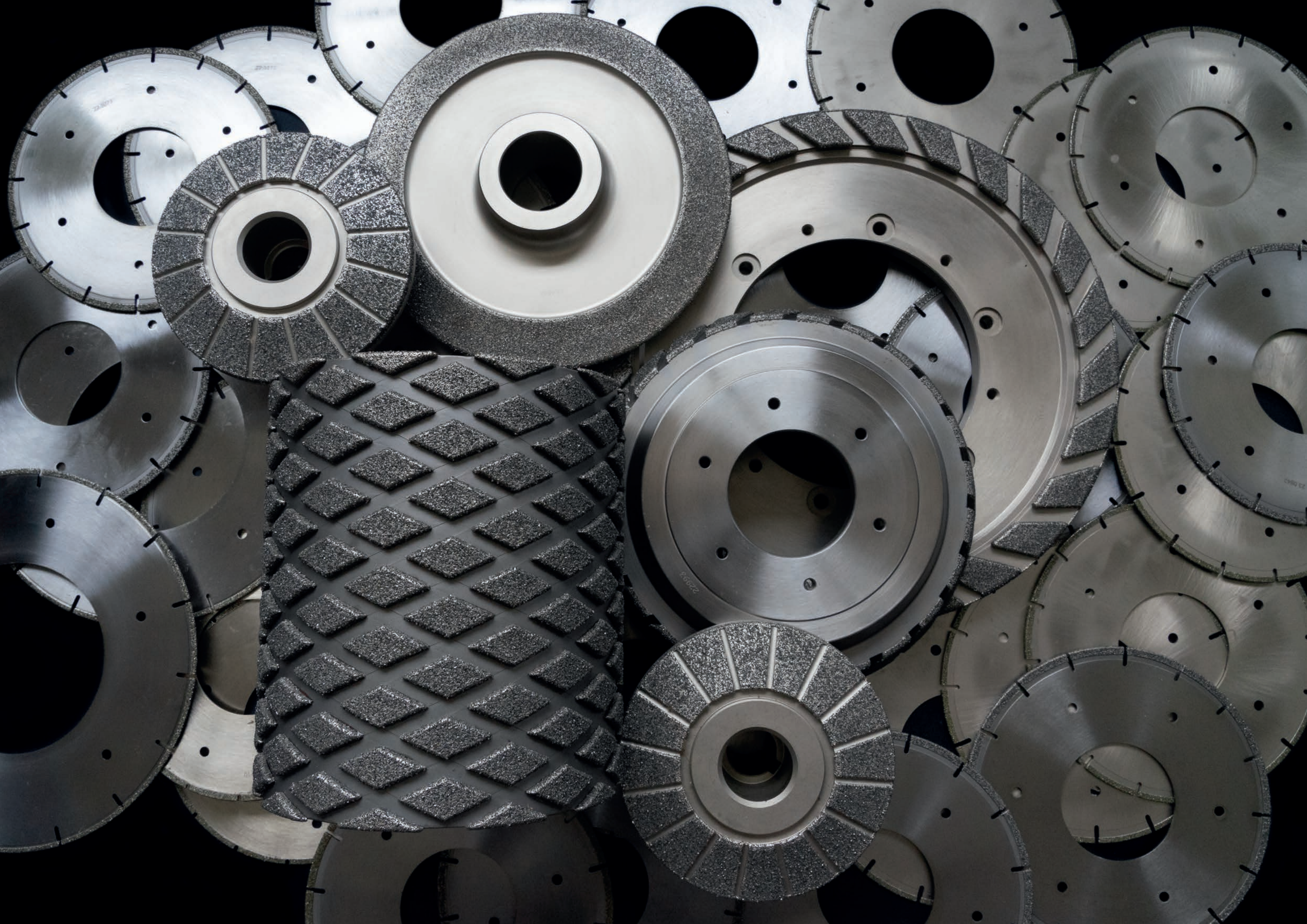

DIAMOND WHEELS FOR BRAKE PADS

Our 20-years-long experience gave us the opportunity to develop a product with excellent performances.
Today our product is the market reference for quality and durability.
The use of perfectly sieved coarse diamond crystals, the highest precision in the manufacturing and the dynamic balancing assure the best performances.

We can manufacture new wheels or regenerate your products in a short delay.

D diameter
H bore diameter
T total thickness
U thickness of the abrasive section
W rim width
E thickness at bore
A chamfer angle (deg)
R radius

ROUGHING DRUM WHEELS

D	T	H	grit	code
200	120	70	D601	**F05896**
200	140	70	D851	**F07686**
200	200	70	D601	**F00643**
200	200	70	D851	**F05793**
200	220	70	D601	**F00449**
200	230	70	D601	**F00570**
200	260	70	D601	**F00943**
200	270	70	D601	**F03974**
200	270	70	D851	**F05586**
200	280	70	D851	**F00876**
250	165	70	D851	**F05401**
250	220	70	D601	**F01571**
250	270	70	D601	**F01019**
250	270	70	D851	**F07775**
250	290	70	D851	**F05562**

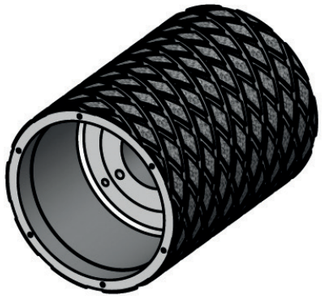

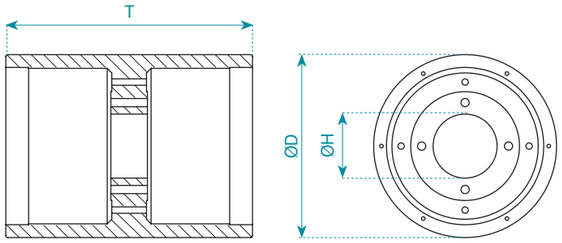

FINISHING CUP WHEELS

D	W	T	H	grit	code
300	25	26	170	D601	**F00417**
350	25	26	170	D426	**F07285**
350	25	26	170	D601	**F00718**

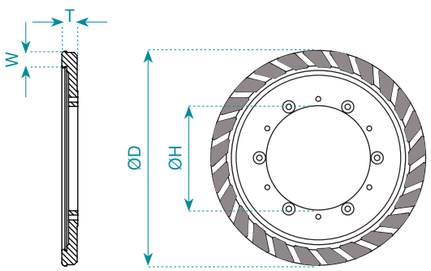

CHAMFERING WHEELS WITH ANGLE

D	H	T	U	A	grit	code
160	30	88	15	10	D851	**F07473**
160	30	88	15	15	D851	**F03261**
160	30	88	22	19	D851	**F05591**
160	30	88	17	20	D851	**F03301**
160	30	88	23	21	D851	**F07474**
160	30	88	27	25	D851	**F07475**
160	30	88	18	35	D851	**F03258**
160	30	88	26	45	D851	**F04598**
160	38	57	16	20	D851	**F07613**
160	38	57	16	25	D851	**F07343**
160	38	57	18	30	D851	**F07612**

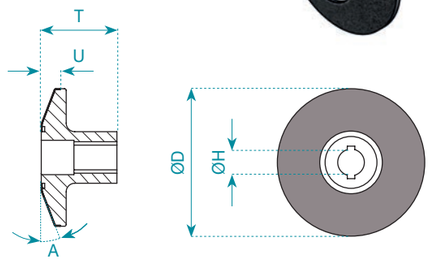

CHAMFERING WHEELS WITH RADIUS

D	H	T	U	R	grit	code
160	30	88	14	5	D851	**F03268**
160	38	57	23	6,5	D851	**F07715**
160	38	57	16	6	D851	**F07843**

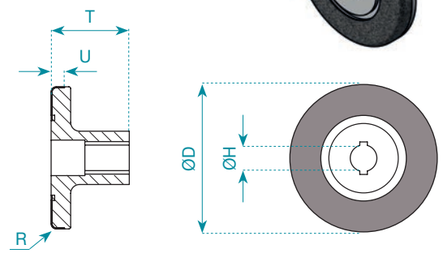

SLOTTING WHEELS

D	H	T	W	E	grit	slots	code
200	75	2,5	3	1,8	D501	■	**F01398**
200	75	2,5	4	1,8	D501		**F05786**
200	75	2,8	3	1,8	D601	■	**F05998**
200	75	3	3	1,8	D601	■	**F00644**
200	75	3,5	3	1,8	D601	■	**F05503**
200	75	3,8	4	1,8	D601	■	**F07981**
200	75	5	5	1,8	D601	■	**F04875**
250	75	2,6	4	1,8	D601	■	**F07834**
250	75	3	5	1,8	D601	■	**F01172**
250	75	3,8	4	1,8	D601	■	**F05857**
250	125	3	3	1,8	D601	■	**F00414**
250	125	3	5	1,8	D601		**F07680**

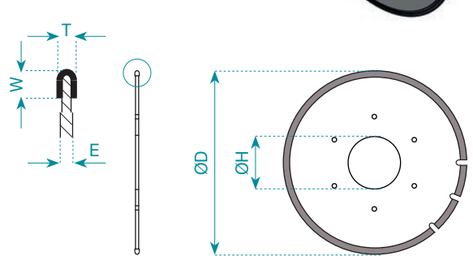

DIAMOND WHEELS FOR CARBIDE ROLLS

MUZZI

We manufacture diamond wheels to shape rolls used in rolling mills.
We produce shaped wheels for plunge grinding and radius wheels for profile grinding.
The overall precision of our wheels and the use of perfectly sieved diamond crystals assure the best quality and durability.

D diameter
H bore diameter
T total thickness
U thickness of the abrasive section
R radius

RADIUS WHEELS FOR PROFILE GRINDING

D	H	T	U	R	grit	code
200	76,2	10	1	0,5	D76	**F06280**
200	76,2	10	2	1	D151	**F02804**
200	76,2	10	3,2	1,6	D251	**F01566**
350	127	20	4	2	D181	**F01824**
350	127	20	7	3,5	D181	**F01821**
350	127	20	10	5	D181	**F01822**
350	127	20	14	7	D181	**F02906**

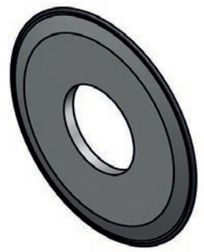

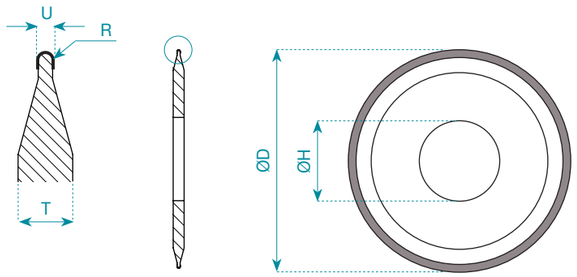

CBN WHEELS FOR COMPRESSION SPRINGS

MUZZI

The grinding of compression-spring ends is more and more performed with electroplated CBN wheels.
We have been pioneering this market and still stand for quality and durability.
More than this, we support our customers in choosing the best CBN grit and the optimal wheel's geometry.
The regeneration of used wheels is a service we are glad to offer to our customers.

Our competence and our production capabilities are at your service.
We can design and manufacture :

- CBN cup wheels for any existing compression-spring-end grinding machine.
- A wide range of wheel diameters : Ø125, Ø150, Ø175, Ø200, Ø225, Ø300, Ø400, Ø450.
- Wheels with fine CBN grit (B107). Fine grits are used with thin spring wires or when it is mandatory to assure the finish and the geometry of the spring.
- Wheels with medium CBN grit (B301). This grit is adopted when in need of a cost-effective tool, for spring wires smaller than 1 mm in diameter.
- Wheels with large CBN grit (B601). This grit is the best choice when grinding larger spring wires, stainless steel and it allows for the best performances.

CBN WHEELS FOR BAND SAW BLADES

MUZZI

Band saw blades are widely used in the wood industry.
Small and large grinding machines make it possible to regenerate the worn blades.
CBN shape wheels are the most effective tool to perform this grinding operation.
We manufacture CBN wheels for any band saw design.
Our wheels stand for the quality of the CBN and for the dimensional precision.

D diameter
H bore diameter
T total thickness
P pitch
A hook angle (deg)
B relief angle (deg)

"HOOK" SHAPE WHEELS

D	H	T	P	A	B	grit	code
127	12,7	23	22,22 (7/8")	10	30	B181	**F05303**
127	12,7	23	22,22 (7/8")	4	32	B181	**F07970**
127	12,7	23	22,22 (7/8")	7	34	B181	**F06833**
127	12,7	23	22,22 (7/8")	7	39	B181	**F06173**
127	12,7	23	22,22 (7/8")	9	29	B181	**F07969**
127	12,7	30	28,57 (1-1/8")	10	30	B181	**F05290**
127	12,7	34	31,75 (1-1/4")	10	30	B181	**F05741**
203,2	25,4	23	22,22 (7/8")	10	30	B181	**F03099**
203,2	25,4	23	22,22 (7/8")	4	32	B181	**F07963**
203,2	25,4	23	22,22 (7/8")	7	34	B181	**F06367**
203,2	25,4	23	22,22 (7/8")	7	39	B181	**F06129**
203,2	25,4	23	22,22 (7/8")	9	29	B181	**F06888**
203,2	25,4	30	28,57 (1-1/8")	10	30	B181	**F05289**
203,2	25,4	34	31,75 (1-1/4")	10	30	B181	**F05295**

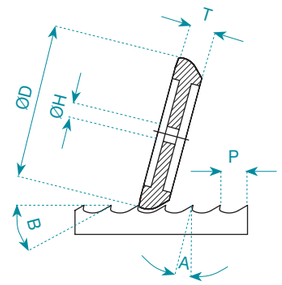

STANDARD TOOLS

MUZZI

Standard grinding pins and wheels for internal grinding and for simple grinding activities.
Wheels for chisels and spherical tools for hand grinding.
Standard grit sizes are D126 and B126.

For special design, dimensions or for different grit sizes, get in touch with us.

D diameter
Sd spindle diameter
L overall length
L1 usable length
T overall thickness

INTERNAL GRINDING PINS (D<Sd)

D	Sd	L	L1	T	grit	code
0,40	3	55	6	3	D46	**RG 0,40**
0,50	3	55	6	3	D46	**RG 0,50**
0,60	3	55	6	3	D76	**RG 0,60**
0,70	3	55	8	3	D76	**RG 0,70**
0,80	3	55	10	3	D91	**RG 0,80**
1,00	3	55	10	4	D91	**RG 1,00**
1,25	3	55	12	4	D91	**RG 1,25**
1,50	3	55	14	4	D91	**RG 1,50**
1,75	3	55	14	4	D91	**RG 1,75**
2,00	3	55	14	4	D126	**RG 2,00**
2,50	3	55	20	4	D126	**RG 2,50**
3,00	3	55	20	5	D126	**RG 3,00**
3,50	6	80	35	8	D126	**RG 3,50 - 6**
4,00	6	80	35	8	D126	**RG 4,00 - 6**
5,00	6	80	35	8	D126	**RG 5,00 - 6**
6,00	6	80	35	8	D126	**RG 6,00 - 6**

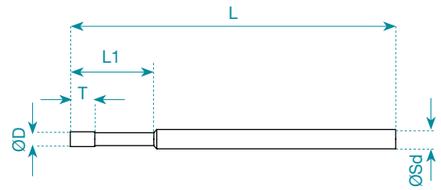

INTERNAL GRINDING PINS (D>Sd)

D	Sd	L	T	grit	code
3,50	3	55	5	D126	**RG 3,50**
4,00	3	55	5	D126	**RG 4,00**
4,50	3	55	5	D126	**RG 4,50**
5,00	3	55	5	D126	**RG 5,00**
6,30	6	80	8	D126	**RG 6,30**
7,00	6	80	10	D126	**RG 7,00**
8,00	6	80	10	D126	**RG 8,00**
9,00	6	80	10	D126	**RG 9,00**
10,00	6	80	10	D126	**RG 10,00**
12,00	6	80	10	D126	**RG 12,00**
14,00	6	80	10	D126	**RG 14,00**
15,00	6	80	10	D126	**RG 15,00**
16,00	6	80	10	D126	**RG 16,00**
18,00	6	80	10	D126	**RG 18,00**
20,00	6	80	10	D126	**RG 20,00**

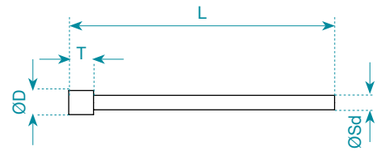

D diameter
H bore diameter
T total thickness
U thickness of the abrasive section
W rim width
Sd spindle diameter
L overall length

INTERNAL GRINDING WHEELS

D	H	T	grit	code
10	6	10	D126	**RF 10**
12	6-8	10	D126	**RF 12**
14	6-8	10	D126	**RF 14**
15	6-8	10	D126	**RF 15**
16	6-8	10	D126	**RF 16**
18	8-10	10	D126	**RF 18**
20	8-10	10	D126	**RF 20**
22	8-10	10	D126	**RF 22**
25	10	10	D126	**RF 25**
30	10	10	D126	**RF 30**
40	10	10	D126	**RF 40**
50	10	10	D126	**RF 50**
10	6	10	B126	**RFB 10**
12	6-8	10	B126	**RFB 12**
14	6-8	10	B126	**RFB 14**
15	6-8	10	B126	**RFB 15**
16	6-8	10	B126	**RFB 16**
18	8-10	10	B126	**RFB 18**
20	8-10	10	B126	**RFB 20**
22	8-10	10	B126	**RFB 22**
25	10	10	B126	**RFB 25**
30	10	10	B126	**RFB 30**
40	10	10	B126	**RFB 40**
50	10	10	B126	**RFB 50**

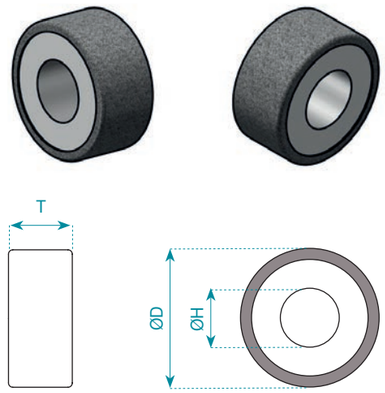

SPHERICAL GRINDING PINS

D	Sd	L	grit	code
0,80	3	35	D107	**MS 0,8**
1,00	3	35	D107	**MS 1,0**
1,30	3	35	D107	**MS 1,3**
1,50	3	35	D107	**MS 1,5**
2,00	3	35	D151	**MS 2,0**
3,00	3	35	D151	**MS 3,0**
3,50	3	35	D151	**MS 3,5**
4,00	3	35	D151	**MS 4,0**
4,50	3	35	D151	**MS 4,5**
5,00	3	35	D151	**MS 5,0**
6,00	3	35	D151	**MS 6,0**
7,00	3	35	D151	**MS 7,0**
8,00	3	35	D151	**MS 8,0**
9,00	3	35	D151	**MS 9,0**
10,00	3	35	D151	**MS 10**
12,00	3	35	D151	**MS 12**
5,00	6	70	D151	**MS 5 G6**
6,00	6	70	D151	**MS 6 G6**
7,00	6	70	D151	**MS 7 G6**
8,00	6	70	D151	**MS 8 G6**
9,00	6	70	D151	**MS 9 G6**
10,00	6	70	D151	**MS 10 G6**
12,00	6	70	D151	**MS 12 G6**
15,00	6	70	D151	**MS 15 G6**

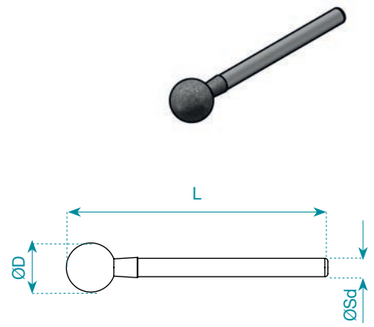

INTERNAL GRINDING WHEELS WITH RECESS

D	H	U	T	W	grit	code
18	8	12	15	3	D126	**RT 18**
20	8	12	15	3	D126	**RT 20**
25	8	12	15	3	D126	**RT 25**
30	12	12	15	4	D126	**RT 30**
35	12	12	15	4	D126	**RT 35**
40	12	12	15	4	D126	**RT 40**
18	8	12	15	3	B126	**RTB 18**
20	8	12	15	3	B126	**RTB 20**
25	8	12	15	3	B126	**RTB 25**
30	12	12	15	4	B126	**RTB 30**
35	12	12	15	4	B126	**RTB 35**
40	12	12	15	4	B126	**RTB 40**

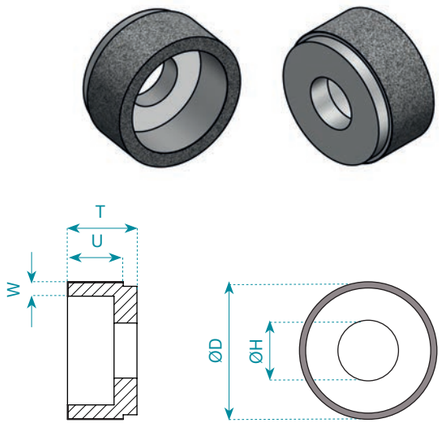

CUP WHEELS

D	H	T	W	U	grit	code
100	20	33	10	4	D76	**MT 100 - D76**
100	20	33	10	4	D126	**MT 100 - D126**
100	20	33	10	4	D213	**MT 100 - D213**
125	20	33	10	4	D76	**MT 125 - D76**
125	20	33	10	4	D126	**MT 125 - D126**
125	20	33	10	4	D213	**MT 125 - D213**
150	20	33	10	4	D76	**MT 150 - D76**
150	20	33	10	4	D126	**MT 150 - D126**
150	20	33	10	4	D213	**MT 150 - D213**

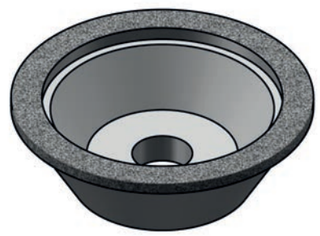

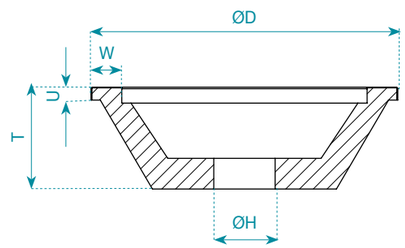

MUZZI SPECIAL ABRASIVE TOOLS

Via Rancole 68, Pietracuta
47865 San Leo (RN) - Italy
Tel +39 0541 923942
info@muzzisrl.it - www.muzzisrl.it

COMPANY WITH
QUALITY SYSTEM
CERTIFIED BY DNV
ISO 9001

Concept and design
Susanna Crisanti

Photos
Susanna Crisanti

3D Models
Muzzi Project dep.

Print
Ciemme, Segrate (MI), Italy

April 2024

www.muzzisrl.it